# adTent Air Premium 3x3 (stelaż + dach + 2 ściany)

**Resolution:** 120 ppi – 1:1 scale

**File format:** PDF

**Color:** CMYK - Coated FOGRA39

flattened file (no layers),
no print marks,
no overprint attribute,
no bleeds,
**do not change the size of the template,**
convert fonts to curves,
suggested black color parameters for backlighting: C78 M85 Y90 K100

Remove the red and blue lines before saving the files. Leaving the line on will result in it being printed as a design element! In order to properly display the advertisement, all important elements should be inside the protective area marked with red line. The background and graphics must fill the entire project area. The shape of the cutting die, including the seam and keder area, is markedblue line. The yellow lines indicate the technical area for sewing tunnels and structural elements – fill it with a solid color.

Download and work on the graphic design template found on the next page of this PDF. If there is more than one, prepare the designs in separate files.

Guideline Label Legend:

Product shape

Safe area (place here elements that should not be trimmed, e.g. logo or text). Remember to remove all lines from the design.

# Roof1

2358 x 1440 [mm]

Print Adtent Air premium 3x3 (roof)

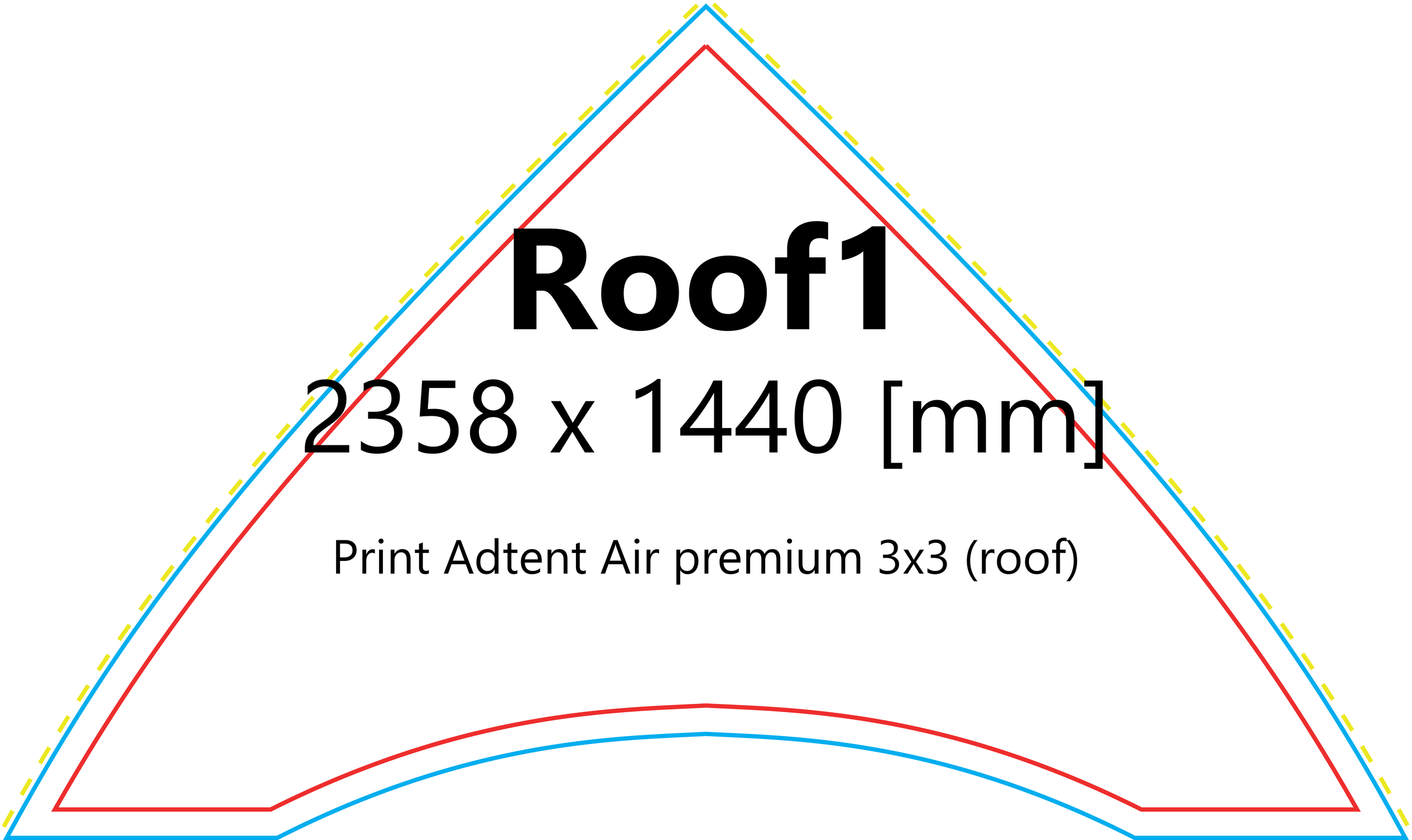

# Roof2

2358 x 1440 [mm]

Print Adtent Air premium 3x3 (roof)

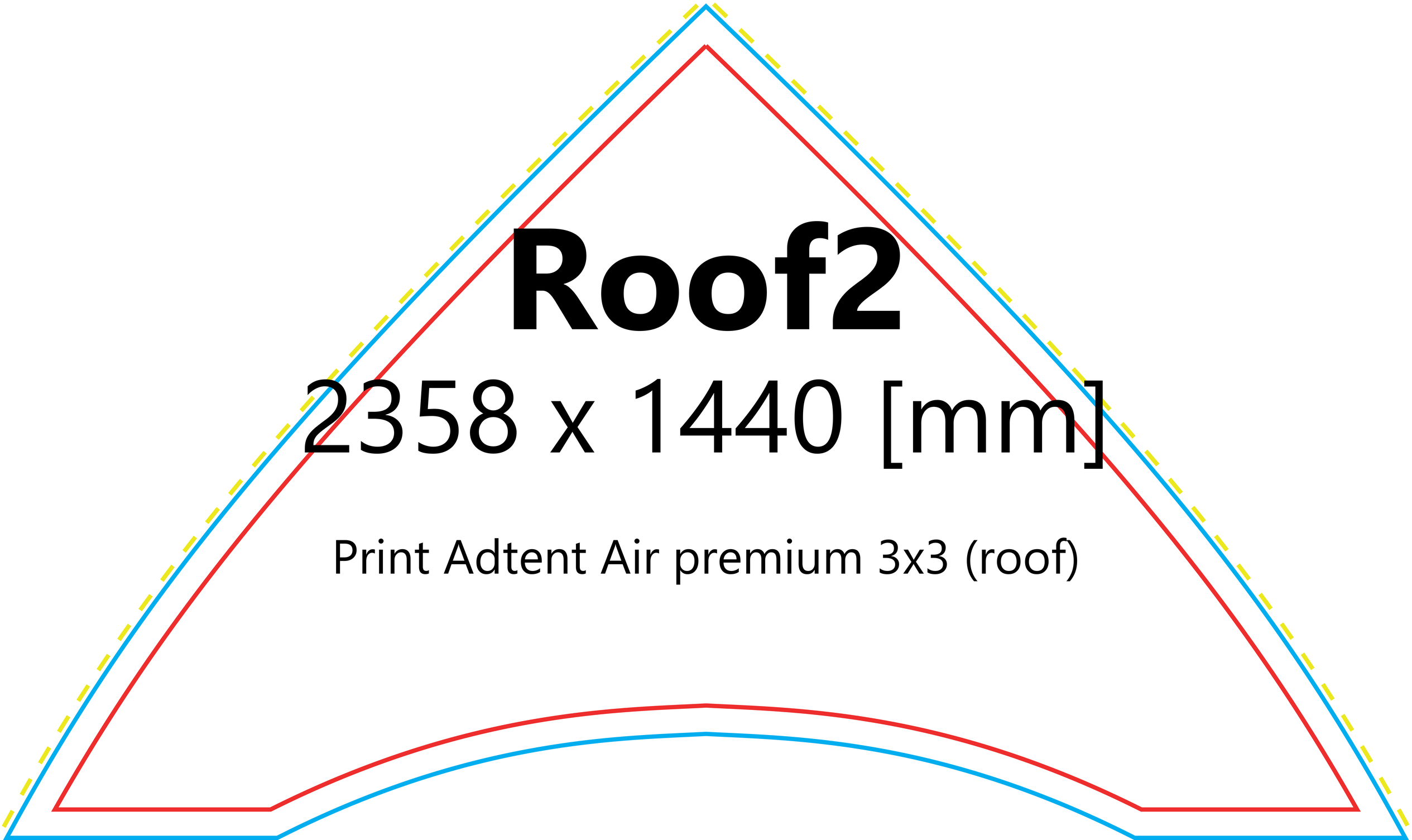

# Roof3

2358 x 1440 [mm]

Print Adtent Air premium 3x3 (roof)

# Roof4

2358 x 1440 [mm]

Print Adtent Air premium 3x3 (roof)

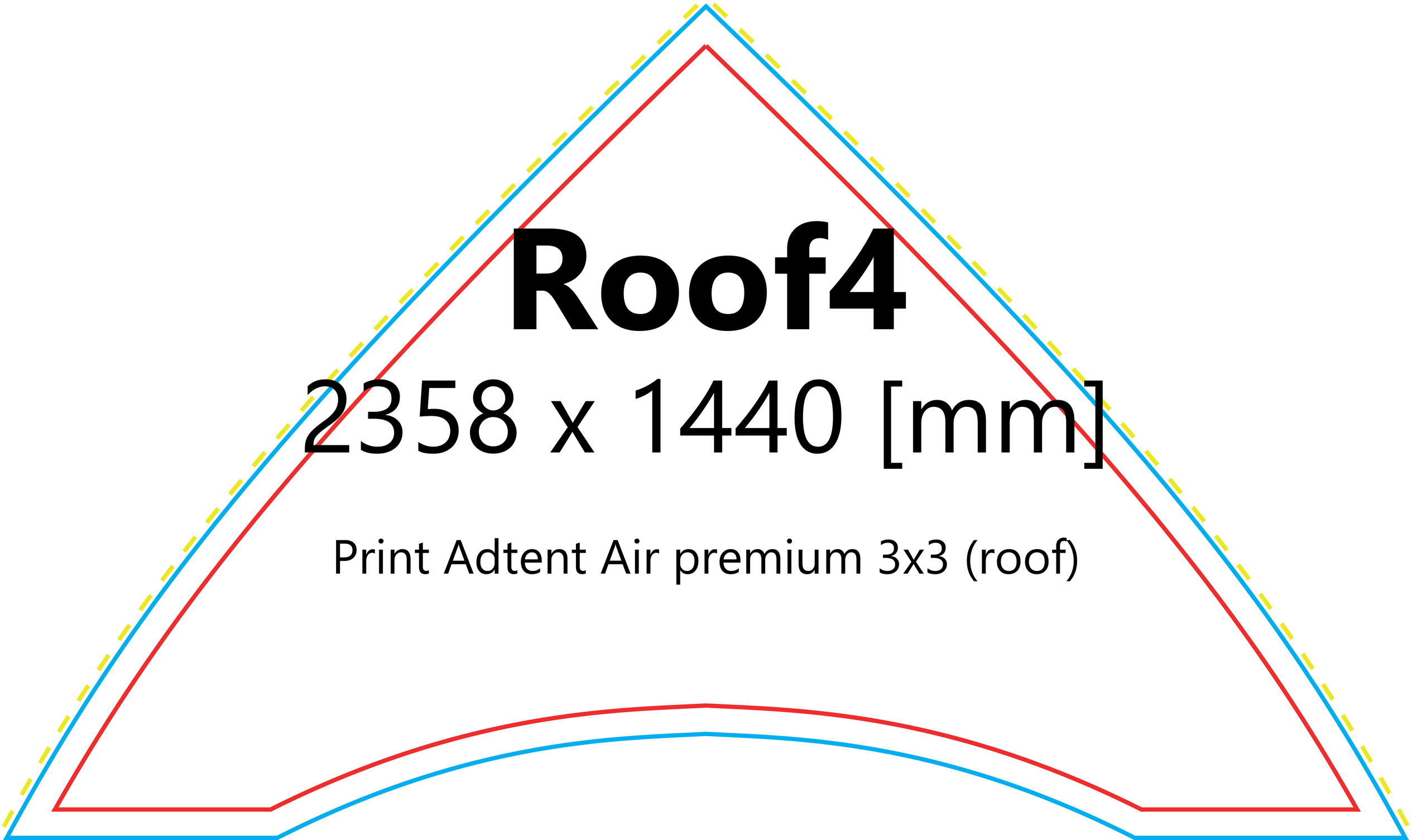

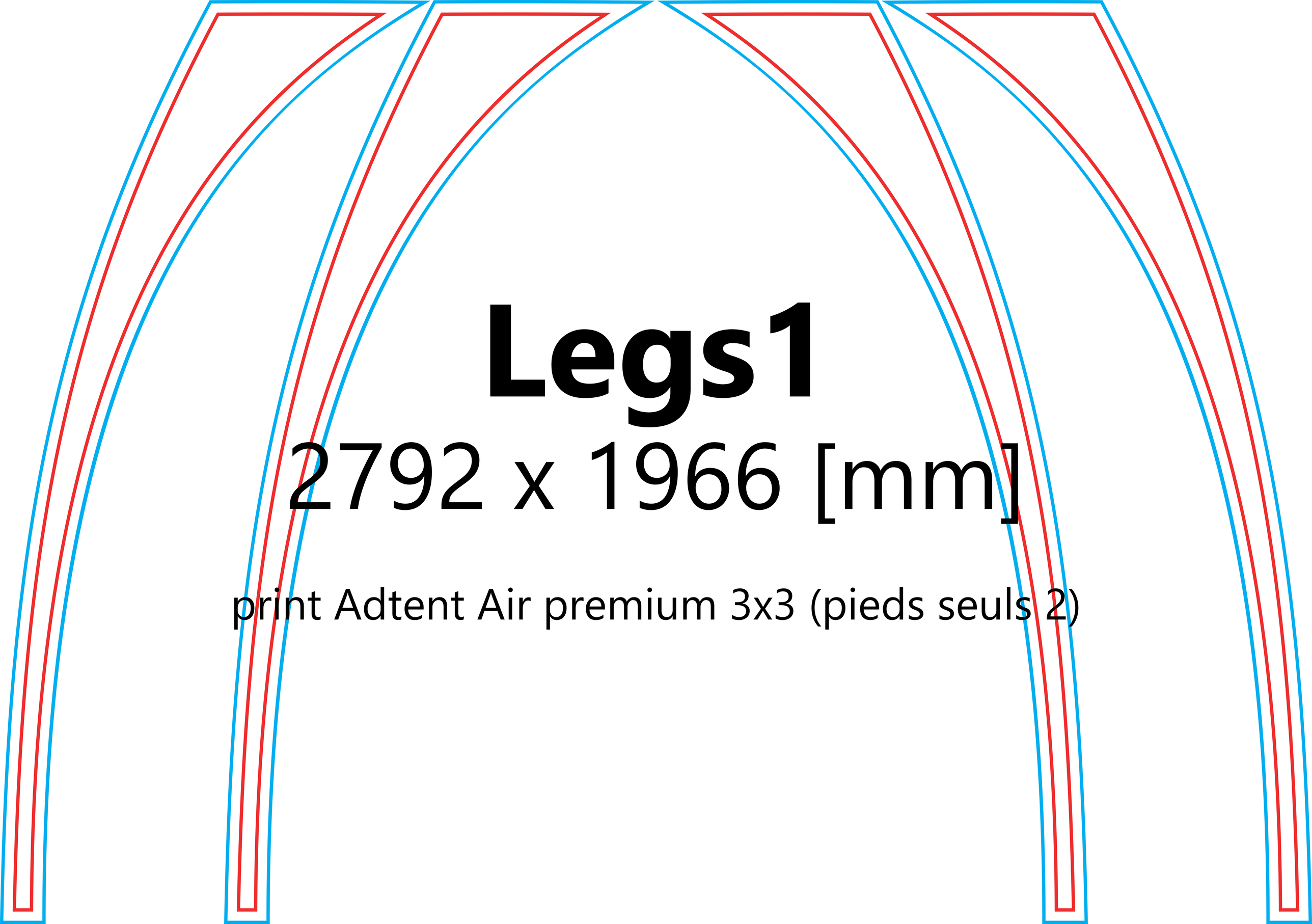

# Legs1

2792 x 1966 [mm]

print Adtent Air premium 3x3 (pieds seuls 2)

# Door

3308 x 2094 [mm]

print adTent air premium 3x3 (side wall single sided)

# Door

3308 x 2094 [mm]

print adTent air premium 3x3 (side wall single sided)